SALES DRAWING SALES DRAWING SALES DRAWING

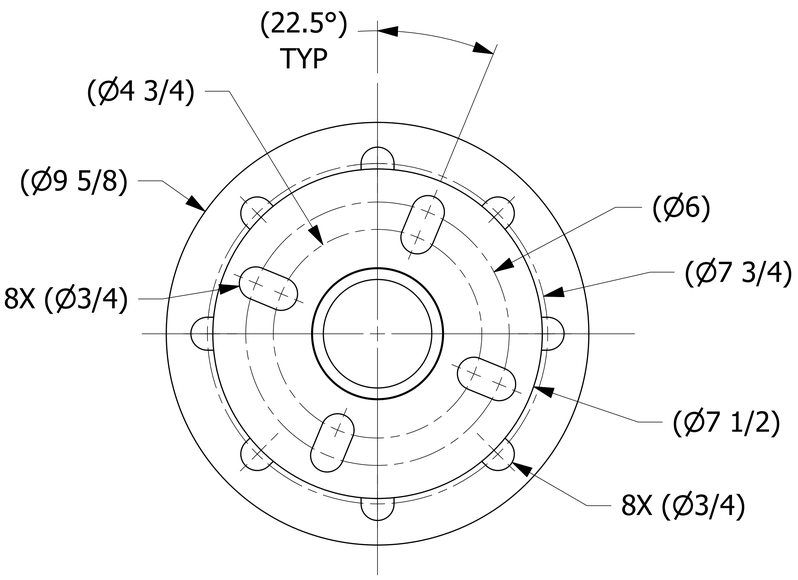

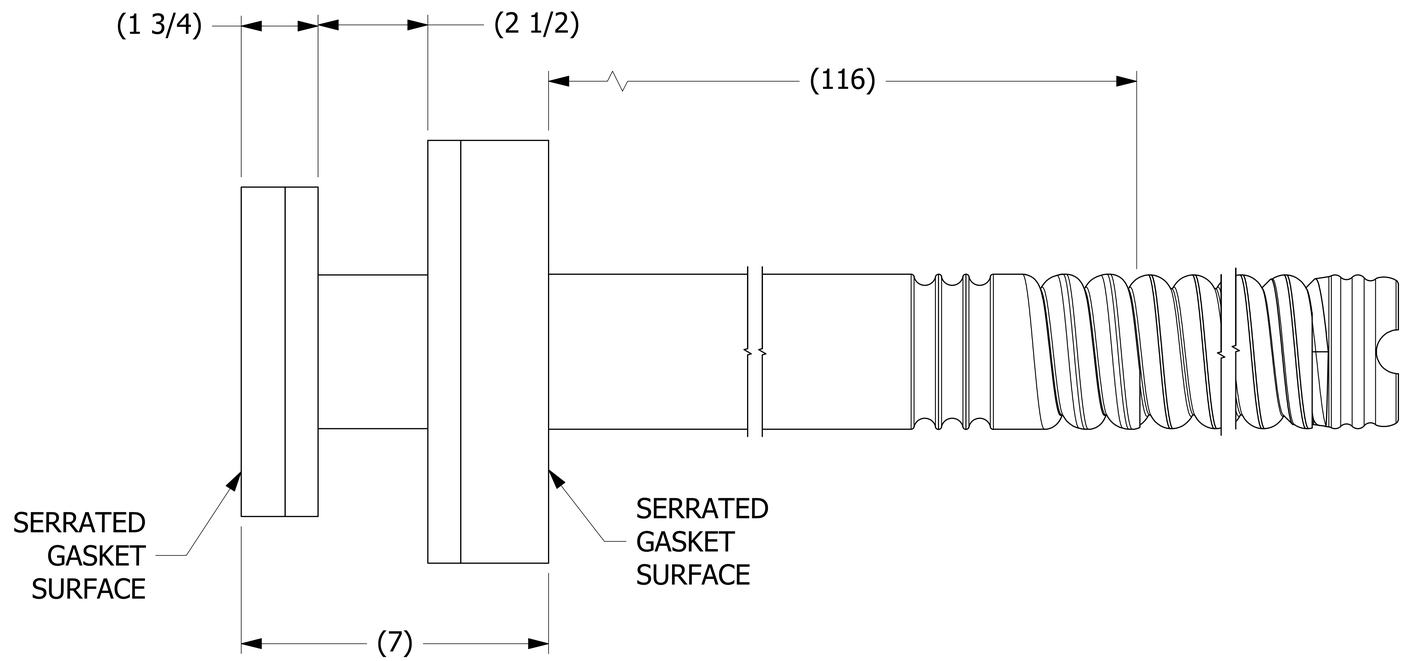

NOTES:
1. FOR FINISH TUBE LENGTHS OF 127" TO 133 1/2".
2. FOR NON-FLAMMABLE SERVICE ONLY.
3. AAR APPROVAL NUMBER IS E-202144.
4. WEIGHT IS APPROXIMATELY 45 LBS.

REV	BY	DATE	REF #	
G	CHL	11/16/21	202111161048	CHL
				PUB

UNLESS OTHERWISE SPECIFIED DIMENSIONAL TOLERANCES
FRACTIONAL: ±1/16
X.XX: ±.03
X.XXX: ±.015
ANGULAR: ±1°
DEBURR ALL SHARP EDGES. ALL MACHINED SURFACES TO HAVE A 125 RMS FINISH UNLESS NOTED OTHERWISE.
THIRD ANGLE PROJECTION

DRAWN BY:	JJK
CHECKED BY:	CHL
PROTOTYPE DATE:	6/14/2012
APPROVED FOR PRODUCTION BY:	CHL
PRODUCTION DATE:	7/25/2012
SIZE:	E
DRAWING #:	33412

SALCO PRODUCTS, INC.

PART NAME: DIP TUBE SPOOL 2"X4"

MATERIAL: SALCO PE/316 SS/FEP

PROJECT #: 120612 | SHEET #: 1 OF 1 | SCALE: 3:4

PART #: HS42DTSP116

THIS PRINT, PROPERTY OF SALCO PRODUCTS INC, CONTAINS PROPRIETARY INFORMATION AND MUST NOT BE COPIED, REPRODUCED, OR USED DETRIMENTALLY TO OUR INTEREST.